LZK | Economic type NC Press Brake

基本功能齐全的液压折弯机

Rack machining

The bending machine frame is integrally processed by a large floor boring and milling machine.

Mechanical torsion axis synchronization

The forged material shaft body has good rigidity and elasticity, and has a fine adjustment device, which is weak against the partial load.

Upper and lower mold standard segment

The user can customize the mold segments 10, 15, 20, 30, 50, 100, 300 (cm).

Professional CNC system

Use ESTUN or DELEM brand CNC system for users to choose.

Manual mechanical deflection compensation (optional)

Manual adjustment of deflection compensation is straightforward and has a digital display.

High precision back gauge structure

It is driven by a ball screw and a linear guide.

The height of the finger can be adjusted manually

The height of the finger is designed from the overall adjustment, and the height of the finger can be adjusted manually.

High quality hydraulic system

Siemens motors, Sunny pumps and Rexroth hydraulic valves are used.

LZK | Basic fully functional hydraulic bending machine

Adjustable torsion axis synchronization design, high quality hydraulic system, high precision back gauge structure.

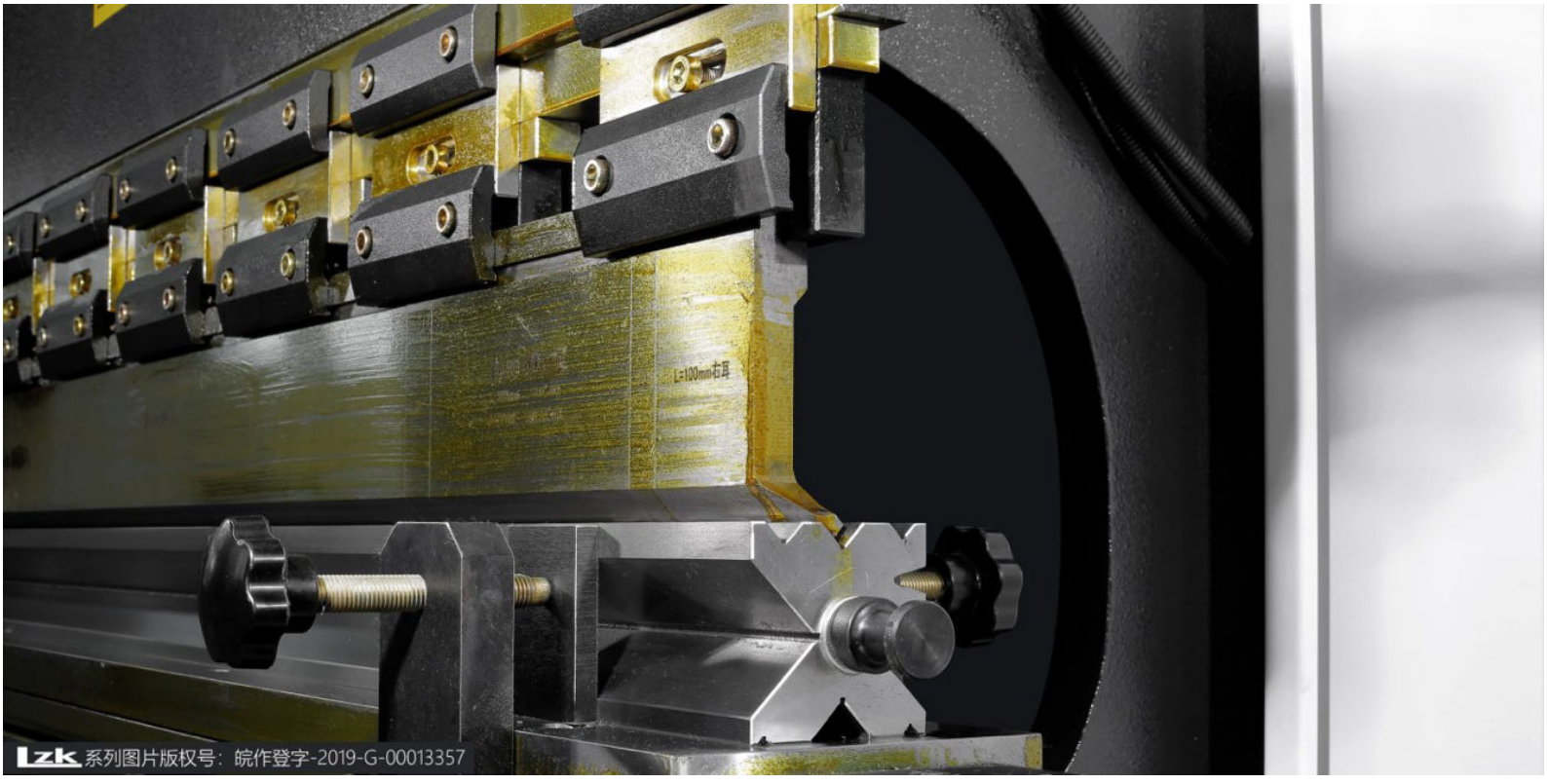

LZK | High quality torsion shaft synchronization structure, high shaft strength and good elasticity

The shaft body adopts the traditional forging and tempering process, which has high strength, good elasticity and adjustable design.

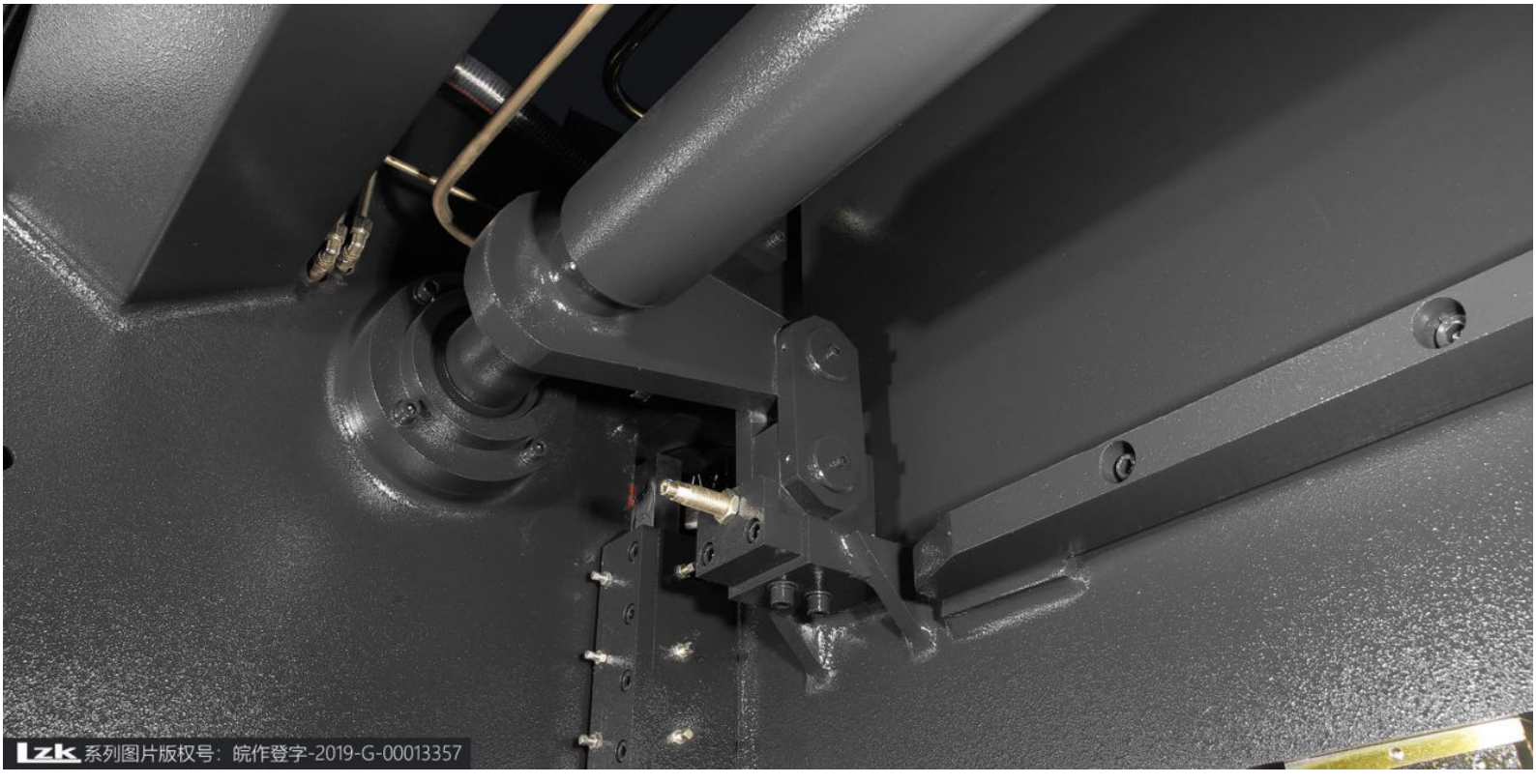

LZK | Premium hydraulic system for durability

With Siemens motors as the main source of power, Sunny pumps and premium hydraulic valves for long-lasting hydraulic power.

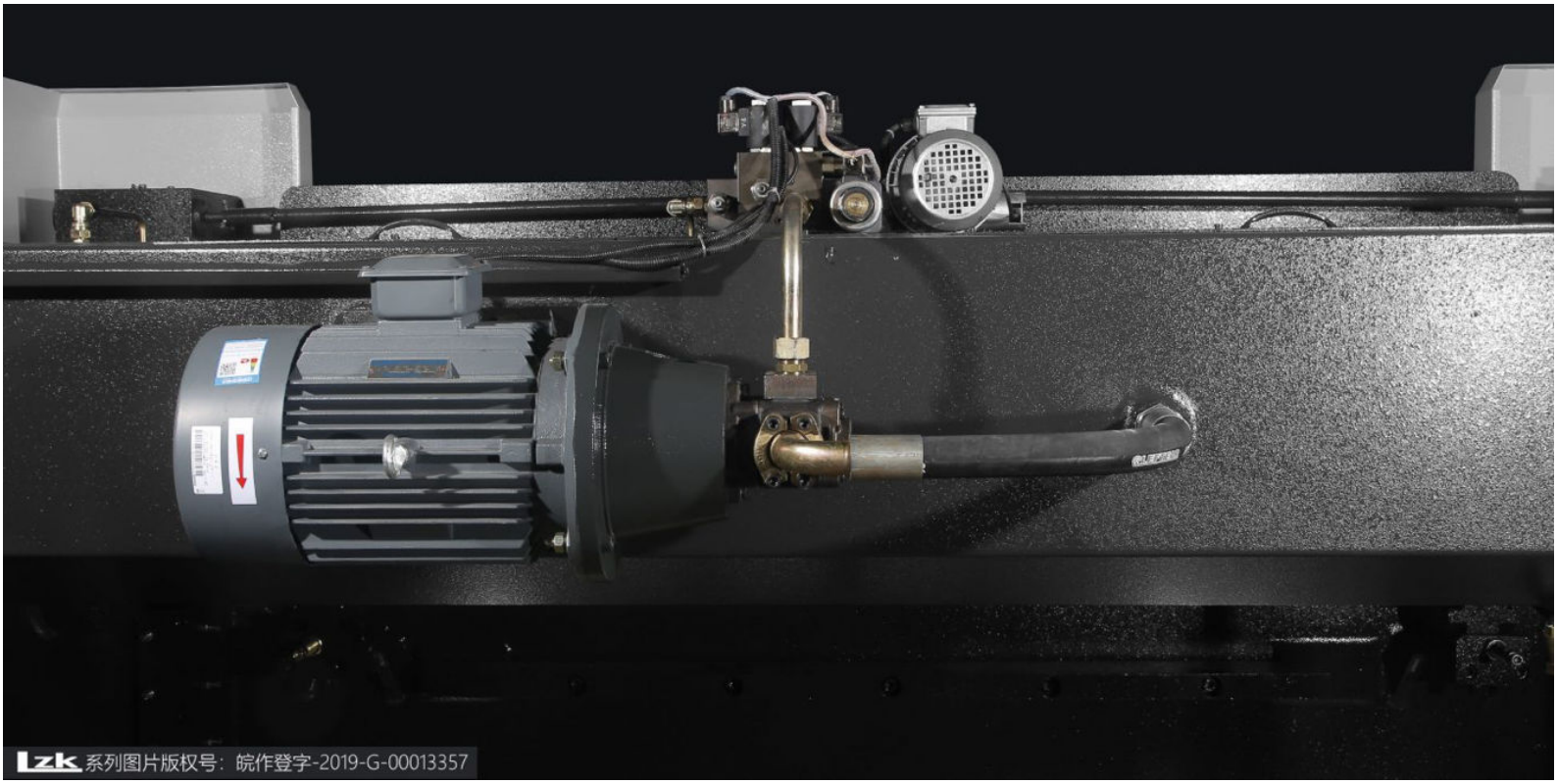

LZK | High quality forging die with high hardness and good toughness

Using the traditional forging tempering process, the bubbles in the steel material are removed, and the overall hardness is improved by heat treatment.

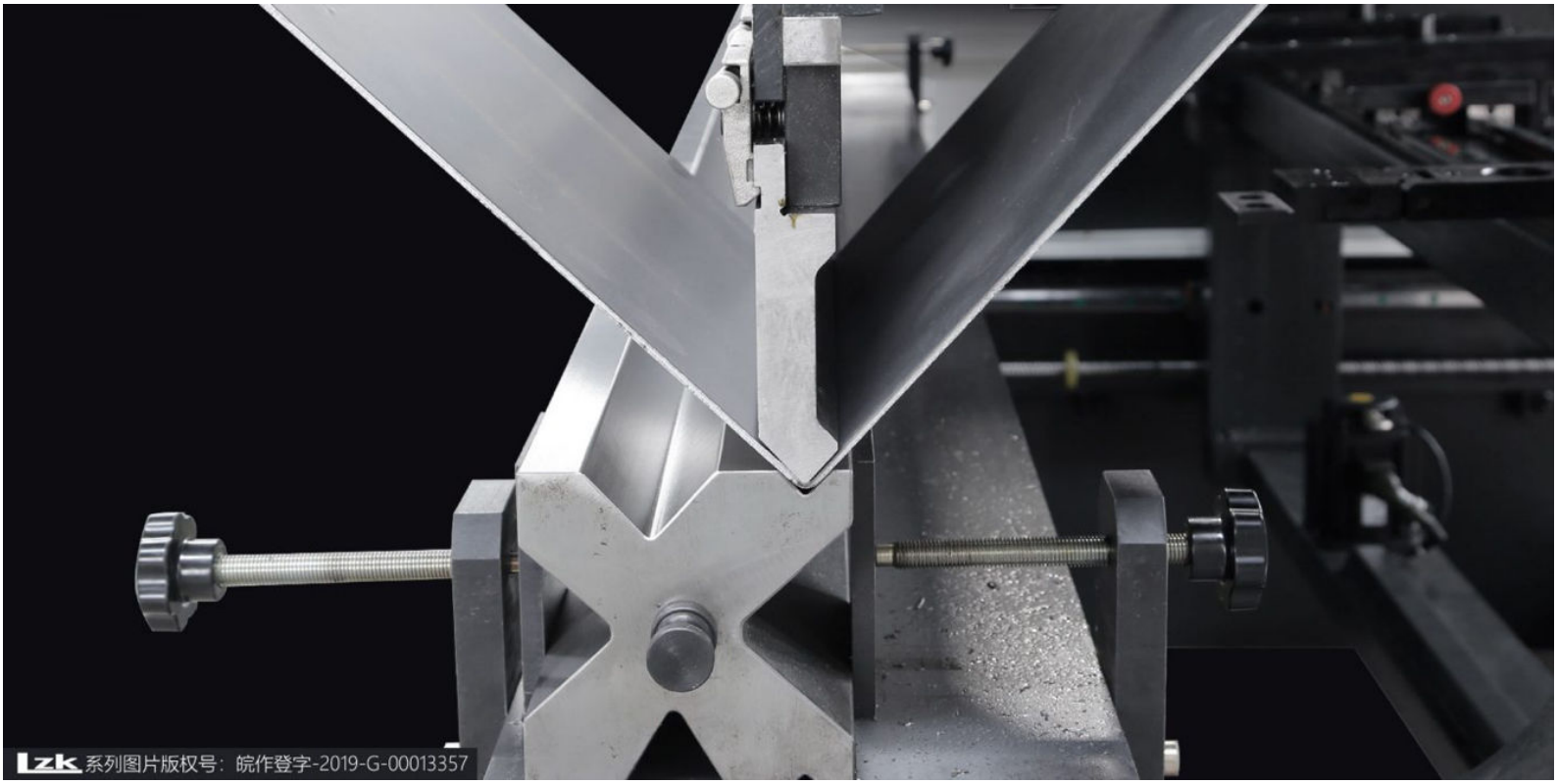

LZK | High-strength backstop structure

The back gauge is welded by steel structure and has high rigidity. It is driven by AC motor, ball screw and linear guide to ensure high precision operation. The four-corner mounting set screws can be quickly adjusted.

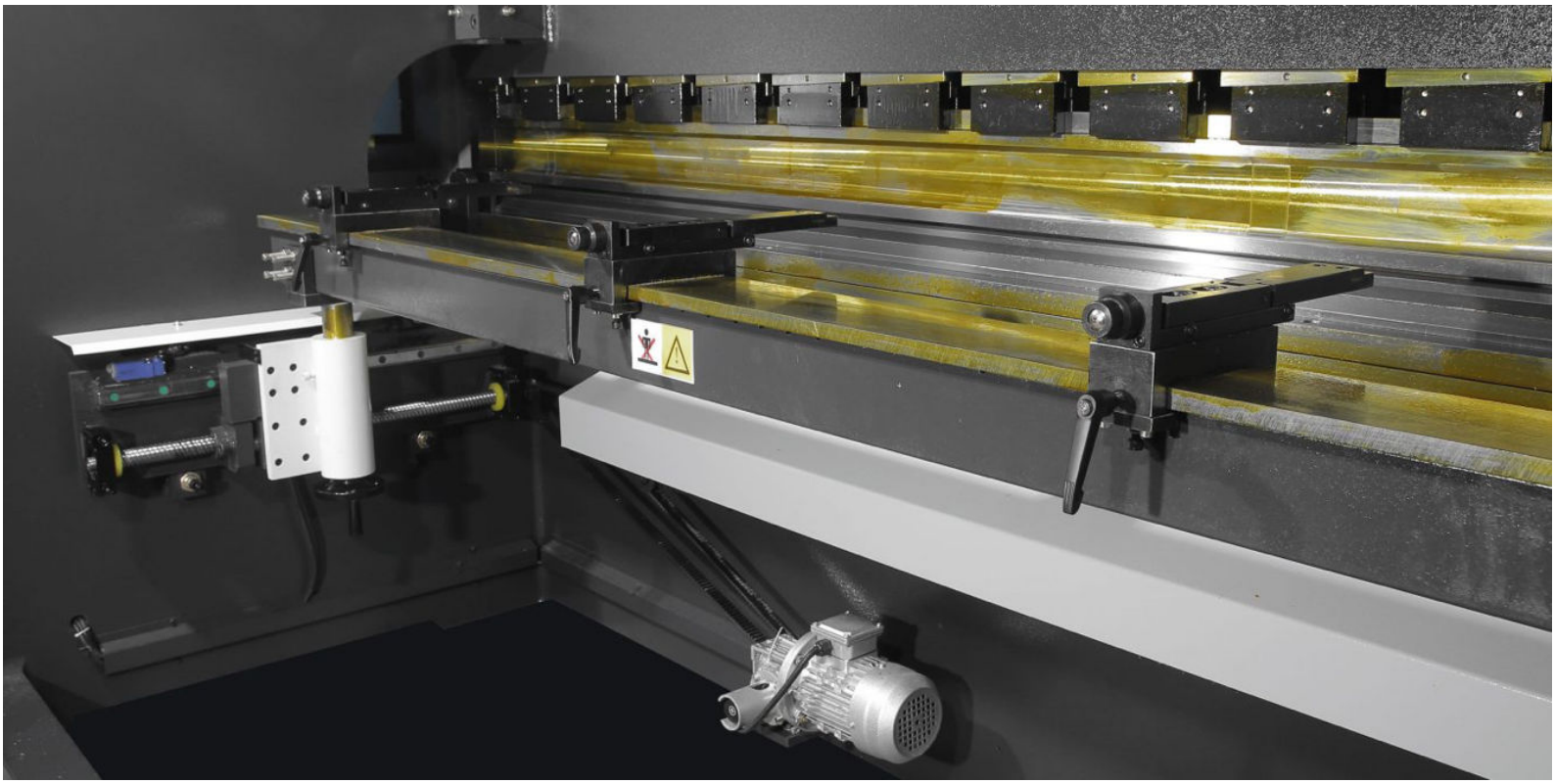

LZK | (R-axis) beam height can be adjusted manually

The back gauge beam is made of square tube and has high rigidity. LZK engineers designed adjustable linkages to achieve overall reduction or elevation of the finger.

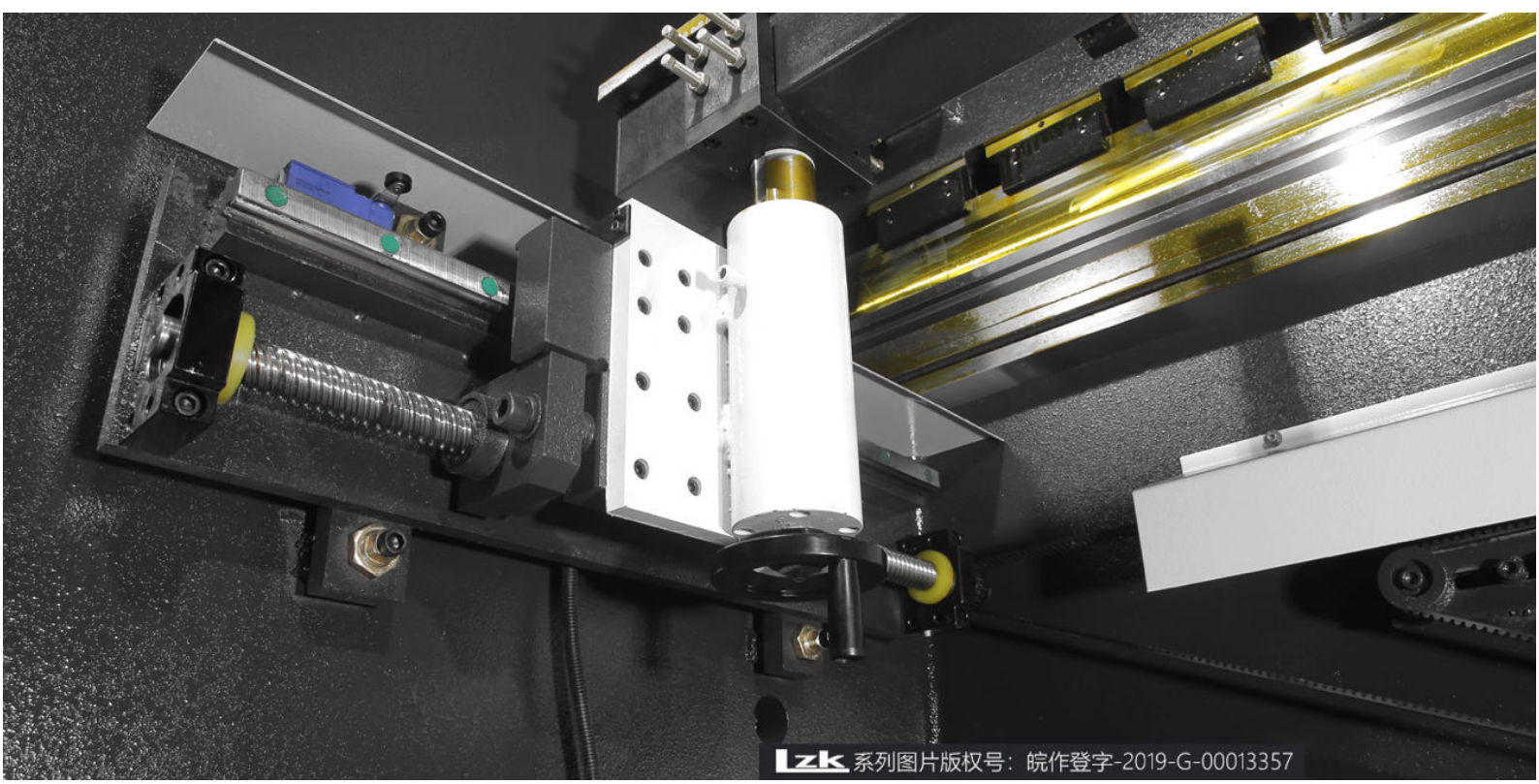

LZK | High precision and fast back gauge structure (optional)

The back gauge is welded by steel structure and has high rigidity. It is driven by servo motor, ball screw and linear guide to ensure high precision operation. The finger frame has high parallelism and quick adjustment on the double linear guide. Features. The four-corner mounting set screws can be quickly adjusted.

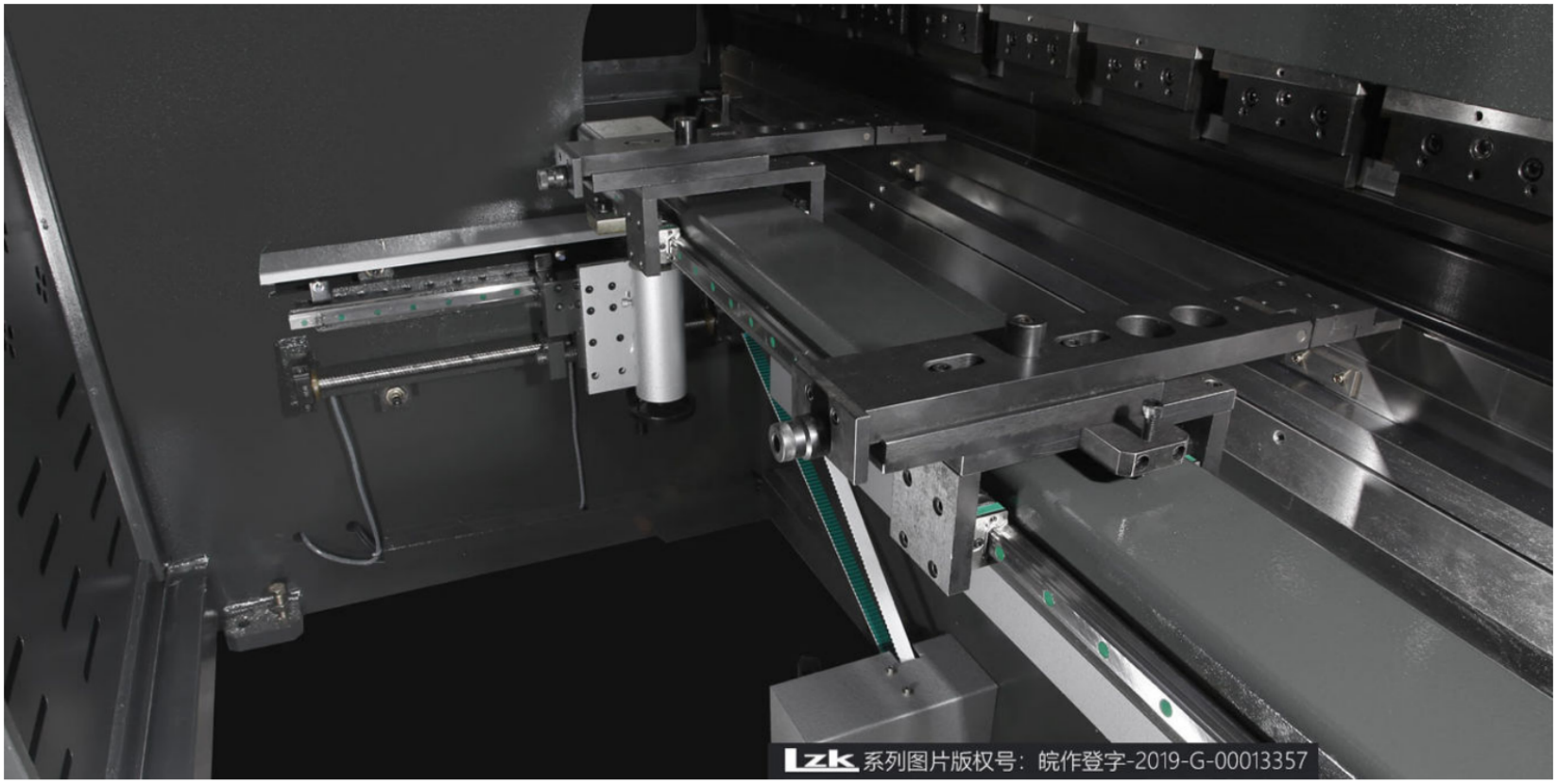

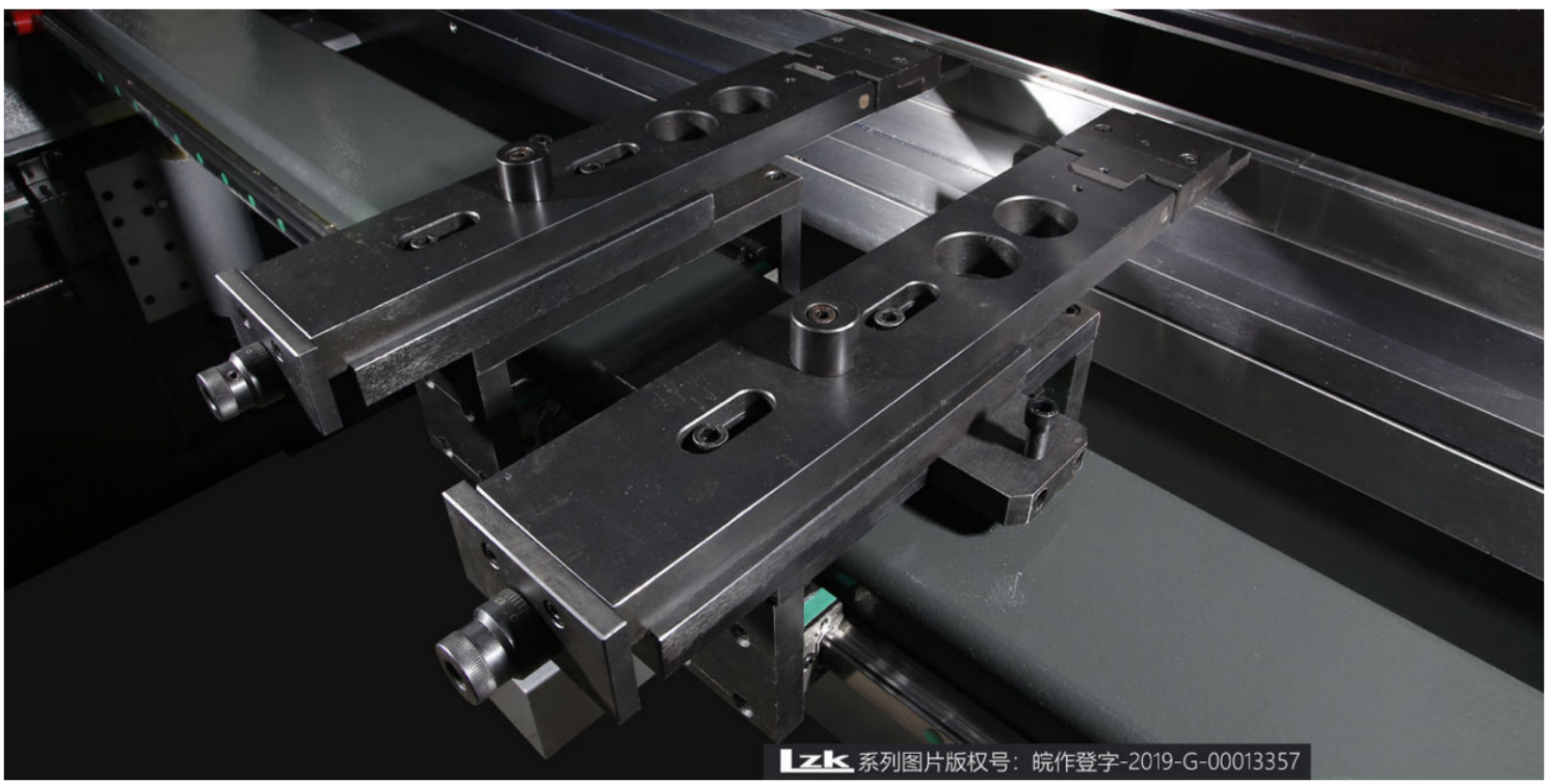

LZK | Manual mechanical deflection compensation (optional)

Manual adjustment of deflection compensation is straightforward and has a digital display.

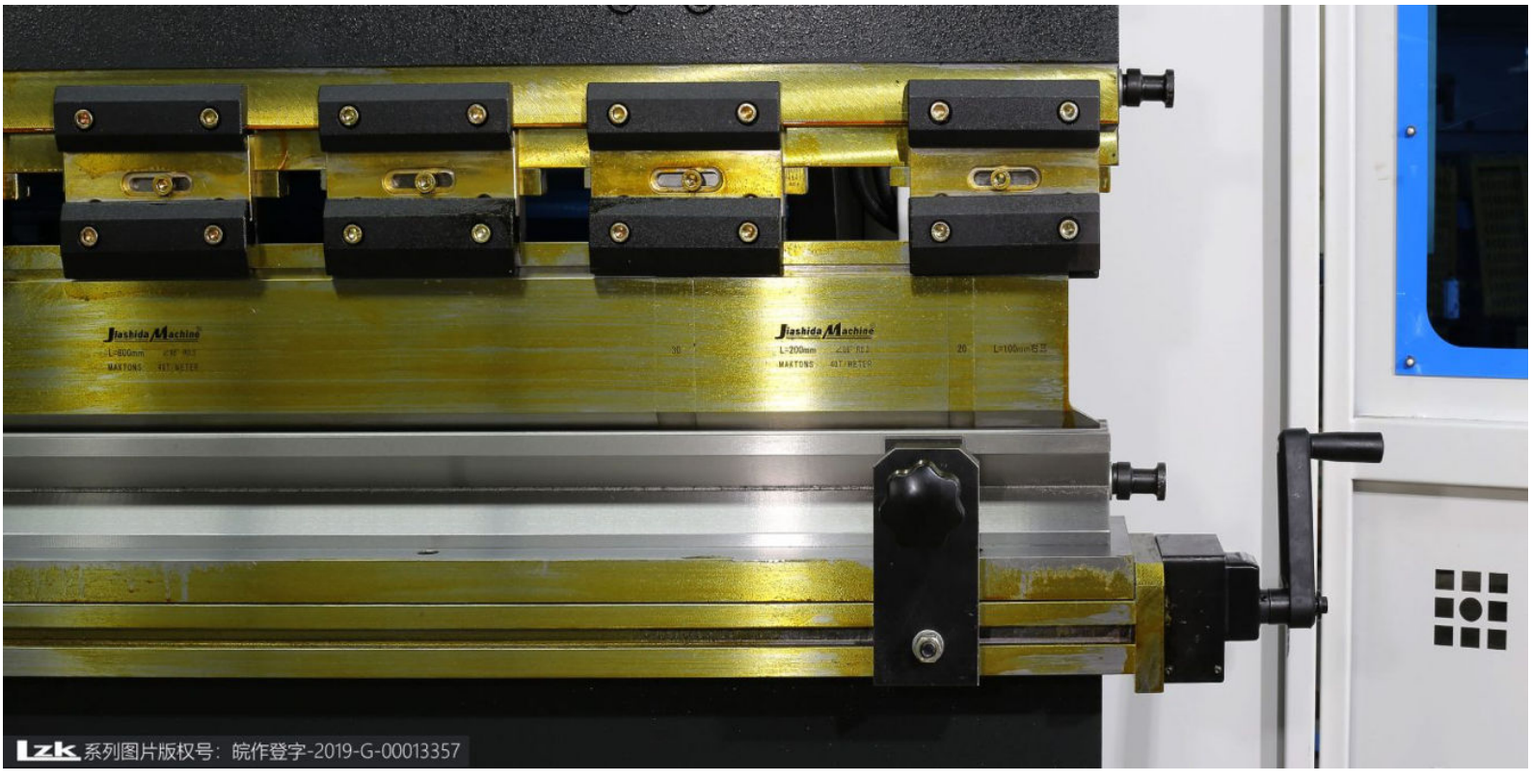

WC67Y series Specs

Model	Force	Max. Length	Vertical	Depth	Stroke	Max. Opening	Power	L*W*H(mm)	Weight
		A	B	D	C	E			
WC67K-40t/2200	400Kn	2200mm	1850mm	220mm	100mm	320mm	5.5KW	2000*1200*1910	2750Kg
WC67K-40t/2500	400Kn	2500mm	1850mm	220mm	100mm	320mm	5.5KW	2500*1200*1910	3000Kg
WC67K-50t/2200	500Kn	2200mm	1850mm	220mm	100mm	320mm	5.5KW	2000*1200*1910	2950Kg
WC67K-50t/2500	500Kn	2500mm	1850mm	220mm	100mm	320mm	5.5KW	2500*1210*2000	3400Kg
WC67K-63t/2500	630Kn	2500mm	1900mm	220mm	120mm	320mm	5.5KW	2500*1300*2210	4000Kg
WC67K-63t/3200	630Kn	3200mm	2560mm	220mm	120mm	320mm	5.5KW	3200*1300*2210	4800Kg
WC67K-80t/2500	800Kn	2500mm	1990mm	320mm	120mm	320mm	7.5KW	2500*1400*2300	5700Kg
WC67K-80t/3200	800Kn	2500mm	2560mm	320mm	120mm	350mm	7.5KW	3200*1500*2300	6020Kg

WC67K-80t/4000	800Kn	4000mm	3000mm	320mm	120mm	350mm	7.5KW	4000*1500*2400	7000Kg
WC67K-100t/2500	1000Kn	2500mm	2020mm	320mm	150mm	400mm	7.5KW	2500*1600*2400	6000Kg
WC67K-100t/3200	1000Kn	3200mm	2600mm	320mm	150mm	400mm	7.5KW	3200*1600*2600	6800Kg
WC67K-100t/4000	1000Kn	4000mm	3000mm	320mm	150mm	400mm	7.5KW	4000*1600*2700	8400Kg
WC67K-125t/2500	1250Kn	2500mm	2020mm	320mm	150mm	400mm	11KW	2500*1600*2400	6500Kg
WC67K-125t/3200	1250Kn	3200mm	2580mm	320mm	150mm	400mm	11KW	3200*1600*2600	7200Kg
WC67K-125t/4000	1250Kn	4000mm	3000mm	320mm	150mm	400mm	11KW	4000*1600*2700	8800Kg
WC67K-160t/3200	1600Kn	3200mm	2600mm	320mm	200mm	460mm	11KW	3200*1700*2700	10500Kg
WC67K-160t/4000	1600Kn	3200mm	3000mm	320mm	200mm	460mm	11KW	4000*1700*2800	11500Kg
WC67K-160t/5000	1600Kn	4000mm	4000mm	320mm	200mm	460mm	11KW	5000*1900*3100	14000Kg
WC67K-160t/6000	1600Kn	6000mm	5000mm	320mm	200mm	460mm	11KW	6300*1900*3200	19500Kg
WC67K-200t/3200	2000Kn	3200mm	2500mm	320mm	200mm	460mm	11KW	3200*1950*2800	12500Kg
WC67K-200t/4000	2000Kn	4000mm	3000mm	320mm	200mm	460mm	11KW	4000*1950*2800	13600Kg
WC67K-200t/5000	2000Kn	5000mm	4000mm	320mm	200mm	460mm	11KW	5000*1950*3100	14500Kg
WC67K-200t/6000	2000Kn	6000mm	5000mm	320mm	200mm	460mm	11KW	6000*1950*3300	21000Kg
WC67K-250t/3200	2500Kn	3200mm	2600mm	400mm	250mm	530mm	18.5KW	3250*2000*3200	19000Kg
WC67K-250t/4000	2500Kn	4000mm	3200mm	400mm	250mm	530mm	18.5KW	4000*2000*3400	20200Kg
WC67K-250t/5000	2500Kn	5000mm	4000mm	400mm	250mm	530mm	18.5KW	5000*2000*3400	23500Kg
WC67K-250t/6000	2500Kn	6000mm	5000mm	400mm	250mm	530mm	18.5KW	6000*2000*3400	27500Kg
WC67K-300t/3200	3000Kn	3200mm	2530mm	400mm	250mm	530mm	22KW	3200*2000*3450	20500Kg
WC67K-300t/4000	3000Kn	4000mm	3200mm	400mm	250mm	530mm	22KW	4000*2000*3450	22500Kg
WC67K-300t/5000	3000Kn	5000mm	4000mm	400mm	250mm	530mm	22KW	5000*2000*3450	25000Kg
WC67K-300t/6000	3000Kn	6000mm	5000mm	400mm	250mm	530mm	22KW	6000*2000*3450	30000Kg
WC67K-400t/4000	4000Kn	4000mm	3000mm	400mm	250mm	530mm	30KW	4000*2180*3500	25000Kg
WC67K-400t/5000	4000Kn	5000mm	4000mm	400mm	250mm	530mm	30KW	5000*2180*3500	29000Kg
WC67K-400t/6000	4000Kn	6000mm	5000mm	400mm	250mm	530mm	30KW	6000*2180*3800	35000Kg
WC67K-500t/4000	5000Kn	4000mm	3000mm	400mm	250mm	590mm	45KW	4000*2580*3500	35000Kg
WC67K-500t/5000	5000Kn	6000mm	4000mm	400mm	250mm	590mm	45KW	5050*3500*3700	44000Kg
WC67K-500t/6000	5000Kn	6000mm	5000mm	400mm	320mm	590mm	45KW	6050*3500*3700	55000Kg
WC67K-600t/4000	6000Kn	6000mm	3000mm	400mm	320mm	590mm	55KW	4050*4500*3700	45000Kg
WC67K-600t/6000	6000Kn	6000mm	5000mm	400mm	320mm	590mm	55KW	6050*4500*3700	60000Kg

Remarks: This parameter is 2019.6.25 day system. If the parameters are not updated in time, please understand.

WC67Y series parts

	Optional model	Manufacturer	Remarks
CNC system	●DA-41s ●E200P ●E300P	Delem ESTUN	
Hydraulic system	●pressure valve	Rexroth	
Back gauge	● single axis ●Two axes	LZK	Carbon steel
Oil pump	●Single stage oil pump	Sunny	
Main power system	●AC motor	Siemens NW	
Front material	●Simple fixed type ●Single rail movable type ●Double track movable type	LZK	
Security	● Side (guardrail) + rear (guardrail) ● Side (guardrail + light curtain protection) + rear (guardrail)	LZK	
Deflection compensation	● Side (guardrail) + rear (guardrail) ● Side (guardrail + light curtain protection) + rear (guardrail)...	LZK	
Mold clamping	●Hand pressure type upper mold clamping	LZK	
electric	●Schneider Relay	Schneider	Open door power protection

Foot switch	●Korean Kaikun vertical switch	Korean Kaikun	
Lower die	●Multi-V die ●Double V core with lower die	LZK	Double V core module can be segmented

CNC systems

ESTUN E300

●CAN-bus mode to control servo system of X axis
●Parts counting
●40 programs saving, each with 25 sequences
●One side positioning
●Built-in time relay for cutting time and retrack
●One key backup/restore of parameters
●Online diagnosis and real-time alarm
●Reserved ports for safety guard
●7"Color LCD bright display
●mm/inch. Chinese/English

Delem DA-41S

●Bright LCD display
●Beam stop control
●Back gauge control
●Angle programming
●Tool programming
●Retract function
●Up to 100 programs
●Up to 25 bends per program
●Panel based housing
●Servo control / inverter / 2-speed AC
●Exchange control

ESTUN E200P

●CAN-bus mode to control servo system of X axis
●Parts counting
●40 programs saving, each with 25 sequences
●One side positioning
●Built-in time relay for cutting time and retrack
●One key backup/restore of parameters
●Online diagnosis and real-time alarm
●Reserved ports for safety guard
●Color LCD bright display
●mm/inch. Chinese/English

ESTUN E21

●CAN-bus mode to control servo system of X axis
●Parts counting
●40 programs saving, each with 25 sequences
●One side positioning
●Built-in time relay for cutting time and retrack
●One key backup/restore of parameters
●Online diagnosis and real-time alarm
●Reserved ports for safety guard
●Color LCD bright display
●mm/inch. Chinese/English